FUJITSU

CONCEALED TYPE SPLIT AIR CONDITIONER

TECHNICAL MANUAL

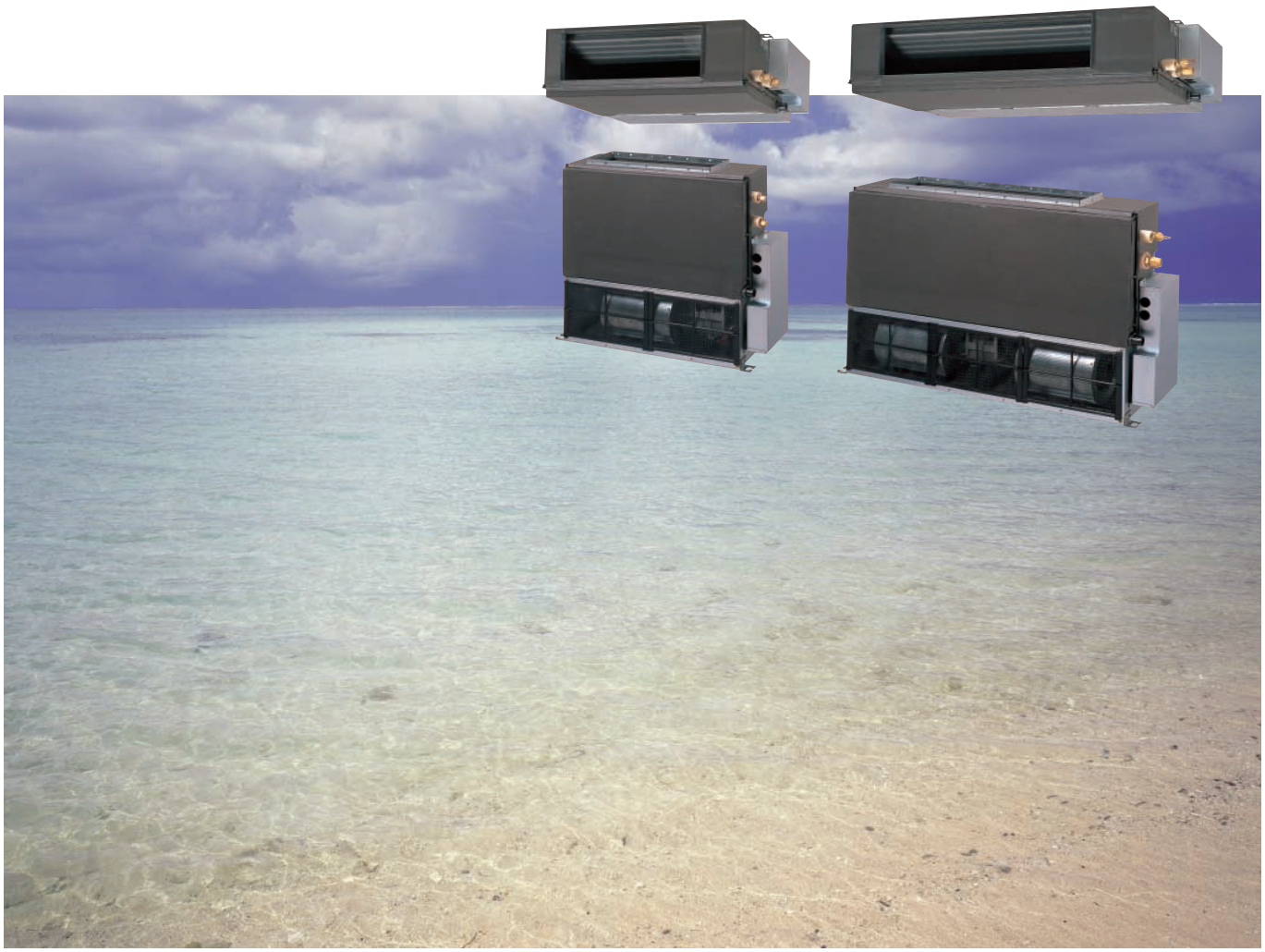

FUJITSU GENERAL LIMITED

Все каталоги и инструкции здесь: http://splitoff.ru/tehn-doc.html

CONTENTS

1. FEATURES 2

2. OUTLINE AND DIMENSIONS 4
   2.1 INDOOR UNIT 4
   2.2 OUTDOOR UNIT 5

3. PERFORMANCE DATA 6
   3.1 PERFORMANCE CURVE 6
   3.2 FAN CURVE 7
   3.3 CAPACITY BY AIR FLOW 7
   3.4 OUTLET AIR TEMPERATURE 7
   3.5 TEMPERATURE RANGE 8
   3.6 REFRIGERANT CHARGE 8

4. SPECIFICATIONS 9

Все каталоги и инструкции здесь: http://splitoff.ru/tehn-doc.html

1. FEATURES

■ *DUCT SPLIT TYPE FEATURES*

- Installed behind the ceiling this design offers space savings and low noise.
- With a beautiful finish, the outlet grille does not stick out into the room.

■ *PRODUCT FEATURES*

Easy to Install (Universal Type)

Ceiling concealed

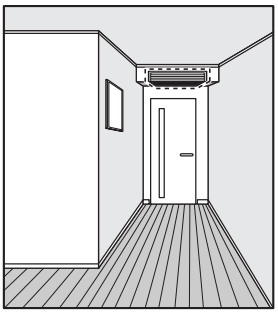

Floor standing concealed

Compact Design

- Ultra-thin duct air conditioner for easy installation

Dimensions (mm)

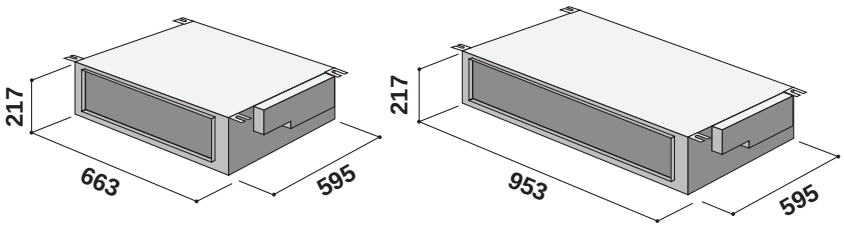

● **Highly functional LCD wired remote controller (Refer to the next page for details.)**
- Two remote controls for operation in different rooms
- Auto restart function in case of power failure
- Repeat timer can turn the unit on/off every day at the same time.
- Only preset air conditioners can be stopped by pressing the ZONE CONTROL button.
- Energy saving operation
  ENERGY SAVE mode uses a computer program to economically control unit operation by raising the set temperature slightly in the cooling mode and lowering the set temperature in the heating mode. If you press the ENERGY SAVE button while the air conditioner is on, it will change to the conservation mode. If you press the ENERGY SAVE button while the unit in the timer mode (ON timer, PROGRAM timer or REPEAT timer), the unit will go into the conservation mode when the unit starts with the timer.

● **Low external air temperature cooling (AO18R Model only)**
- Cooling and heating operations capable with external air temperature down to 0°C.

● **Tropical specifications (AO18R Model only)**
- Cooling operation capable with external air temperature up to 52°C.

● **Pipe length up to 20m with height differential up to 10m (AO18R Model only)**

Все каталоги и инструкции здесь: http://splitoff.ru/tehn-doc.html

■ *LIQUID CRYSTAL REMOTE CONTROLLER*

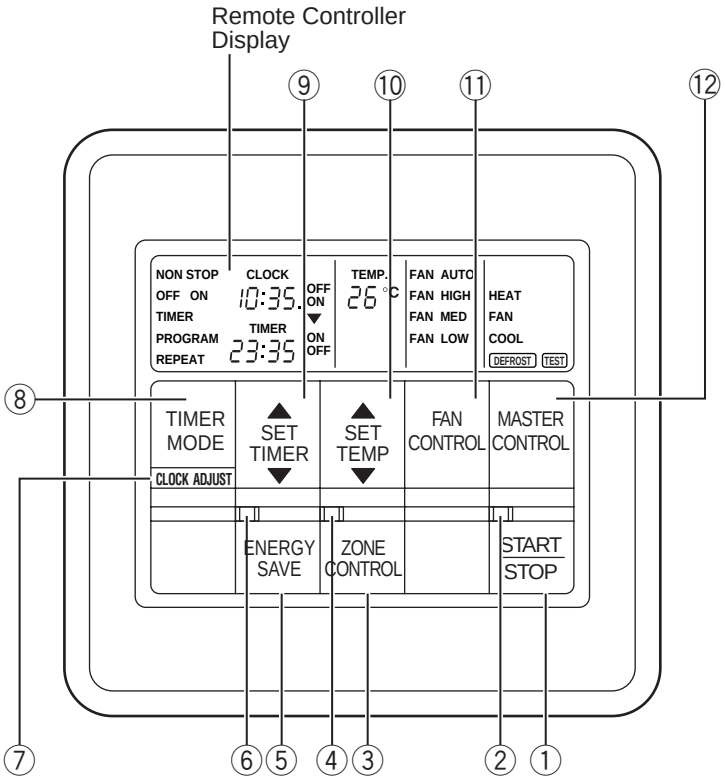

For explanatory purposes, the figure showing the remote controller display shows all possible displays. The actual display shows only that area that is being adjusted or used.

● Remote Controller Display

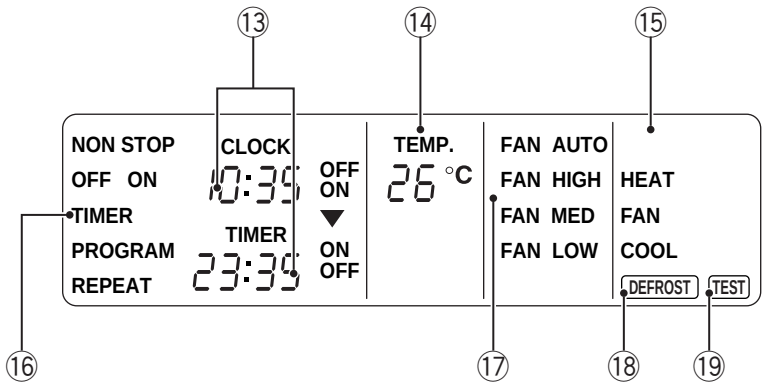

Depending on the usage circumstances of the unit (room size, outdoor temperature etc.), the displayed temperature may differ from the actual room temperature.

① **START/STOP Button**
Press to start and stop operation.

② **Operation Lamp**
Lights it during operation and when the timer is on.

③ **ZONE CONTROL Button**
Use to turn the zone control on and off.

④ **ZONE CONTROL Lamp**
Lights up when the unit is in the zone control mode.

⑤ **ENERGY SAVE Button**
Turns the energy efficient mode on and off.

⑥ **ENERGY SAVE Lamp**
Lights up when the unit is in the energy save mode.

⑦ **CLOCK ADJUST Button**

⑧ **TIMER MODE Button**
Use to change timer modes (NON STOP, OFF TIMER, ON TIMER, PROGRAM TIMER, REPEAT TIMER).

⑨ **SET TIME Button (▲ / ▼)**
Use to change the timer settings and to set the current time.

⑩ **SET TEMP. Button (▲ / ▼)**
Use to change the temperature setting.

⑪ **FAN CONTROL Button**
Use to select the fan speed (AUTO, HIGH, MED, LOW).

⑫ **MASTER CONTROL Button**
Use to select the various operating modes (HEAT, FAN, COOL).

⑬ **Clock Display (CLOCK/TIMER)**

⑭ **Set Temperature Display (TEMP.)**

⑮ **Operation Mode Display**

⑯ **Timer Mode Display**

⑰ **Fan Speed Display**

⑱ **DEFROST Display**

⑲ **TEST display**

Все каталоги и инструкции здесь: http://splitoff.ru/tehn-doc.html

2. OUTLINE AND DIMENSIONS

2.1 INDOOR UNIT

(Unit : mm)

- MODELS : AR□7R / 9A / 9R

Note :
□ { Y : Europe version
T : Australia version

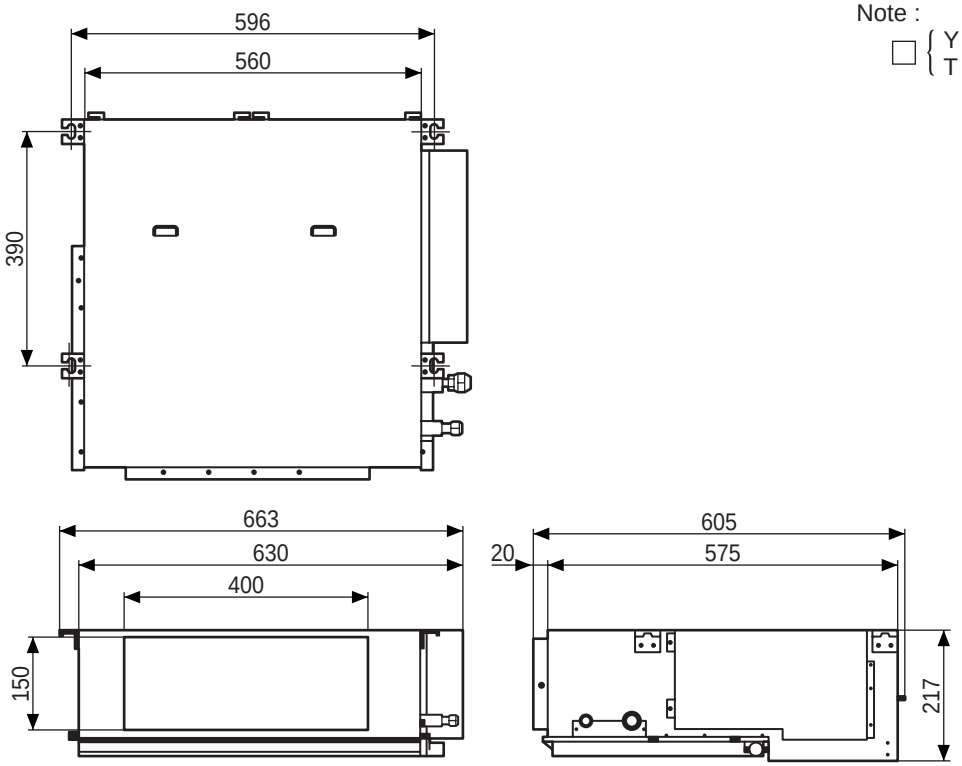

- MODELS : AR□12R / 14R / 18R / 18RH

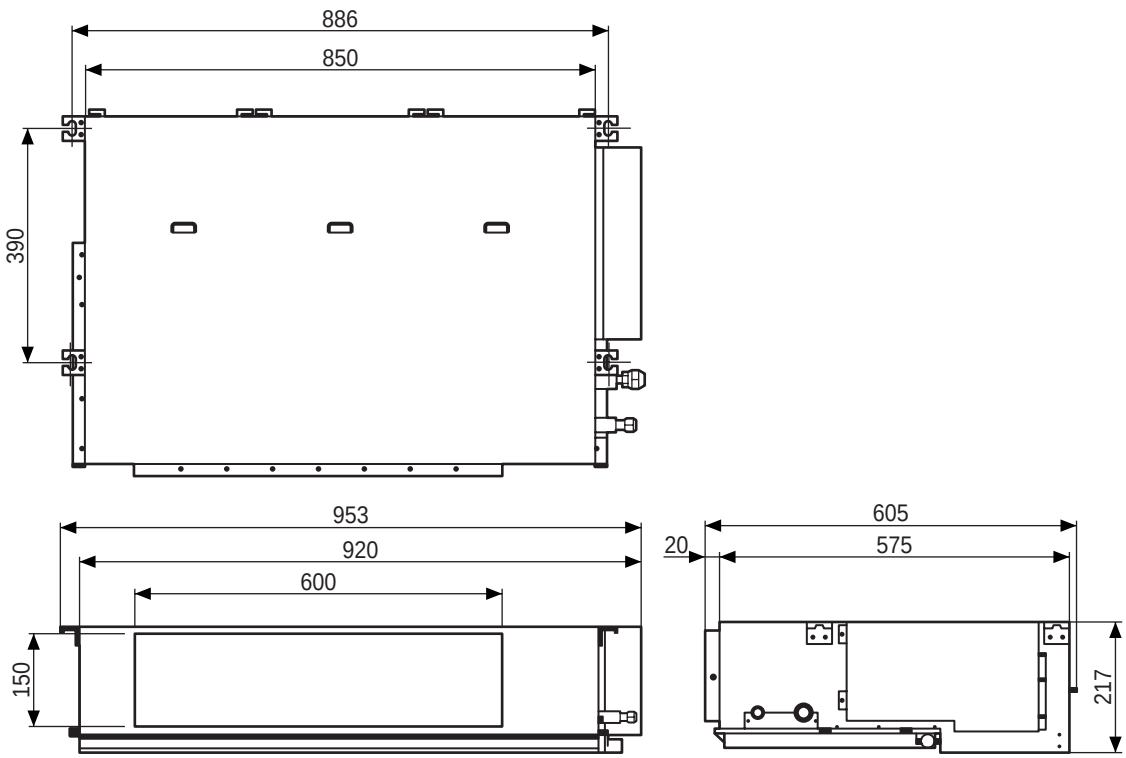

Все каталоги и инструкции здесь: http://splitoff.ru/tehn-doc.html

2.2 OUTDOOR UNIT

- MODEL : AO□18R (Unit : mm)

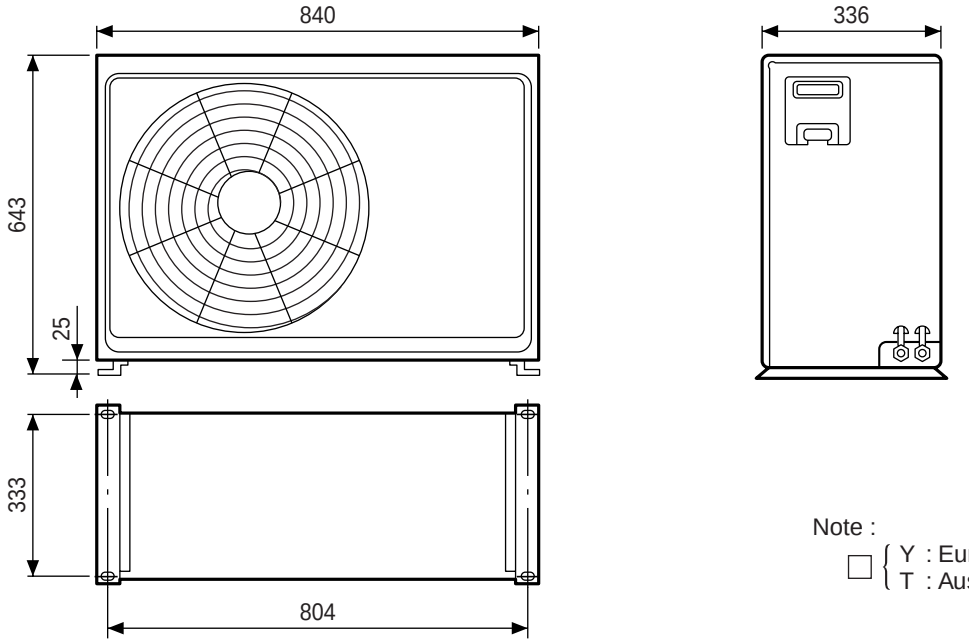

Note :
□ { Y : Europe version
T : Australia version

- MODELS : AO□7R / 9A / 9R / 12R / 14R

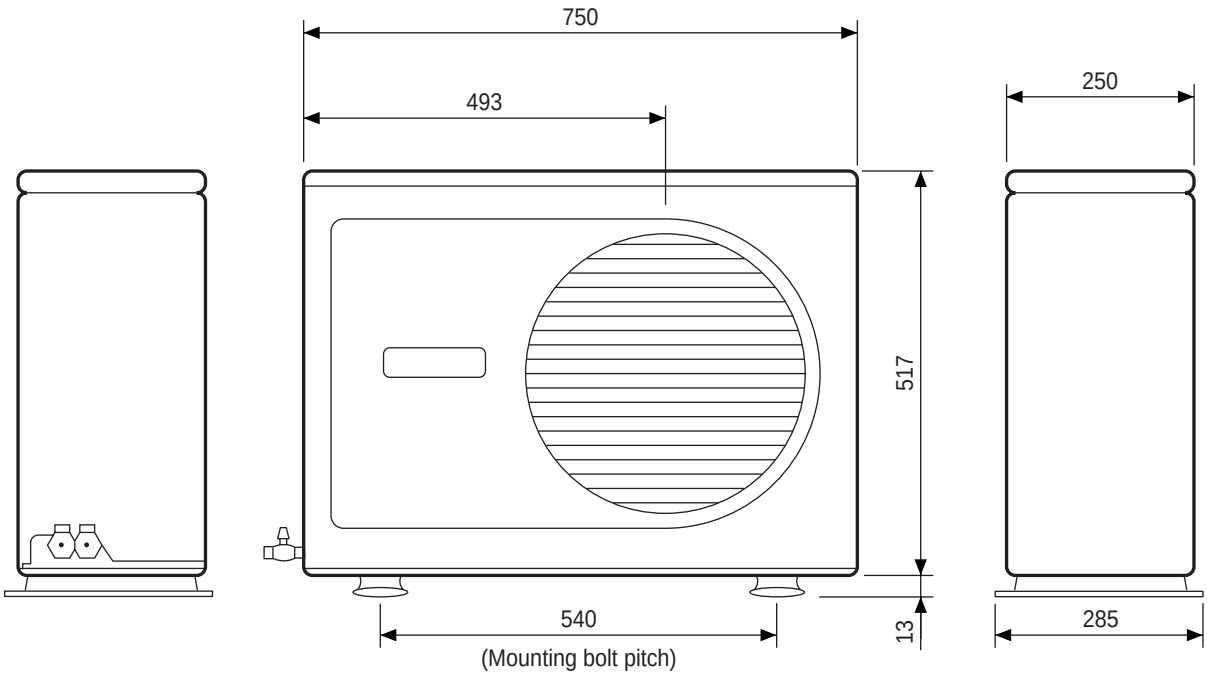

Все каталоги и инструкции здесь: http://splitoff.ru/tehn-doc.html

3. PERFORMANCE DATA

3.1 PERFORMANCE CURVE

Note :
□ { Y : Europe version
T : Australia version

AR□18R

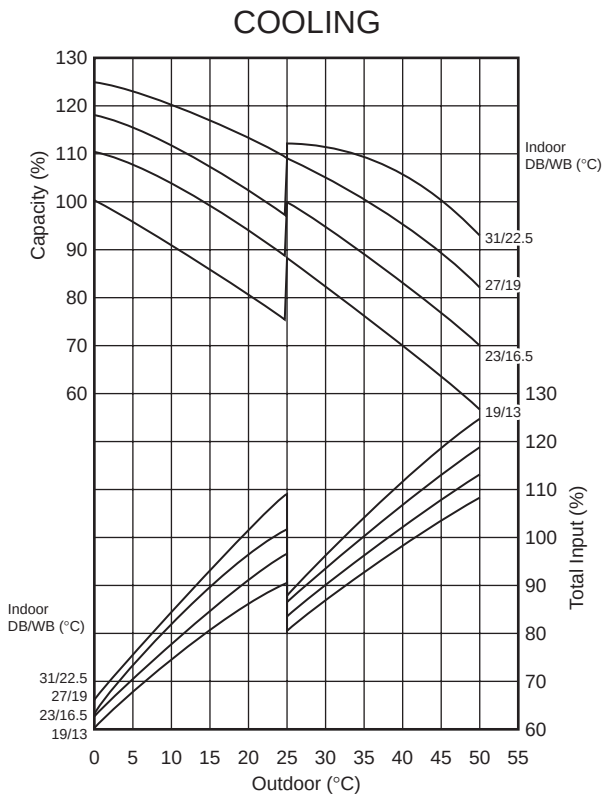

AR□18R

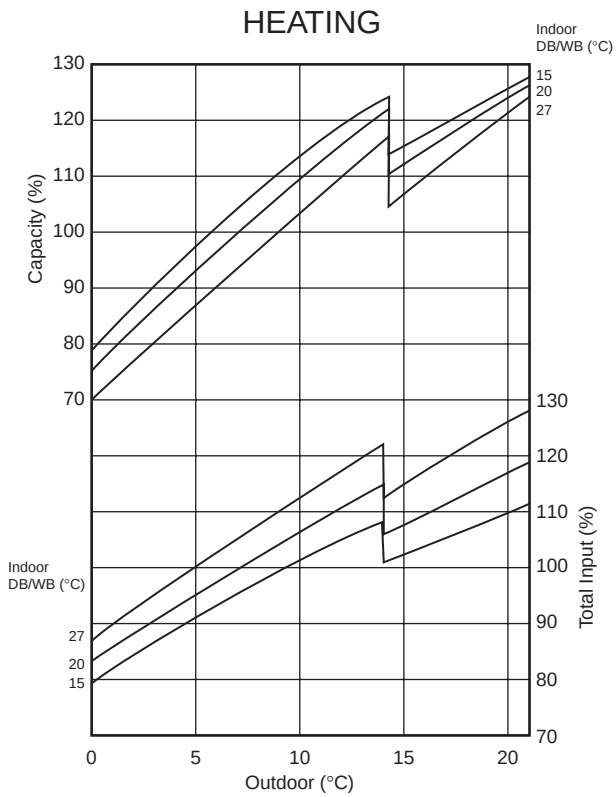

AR□7R / 9R / 12R / 14R

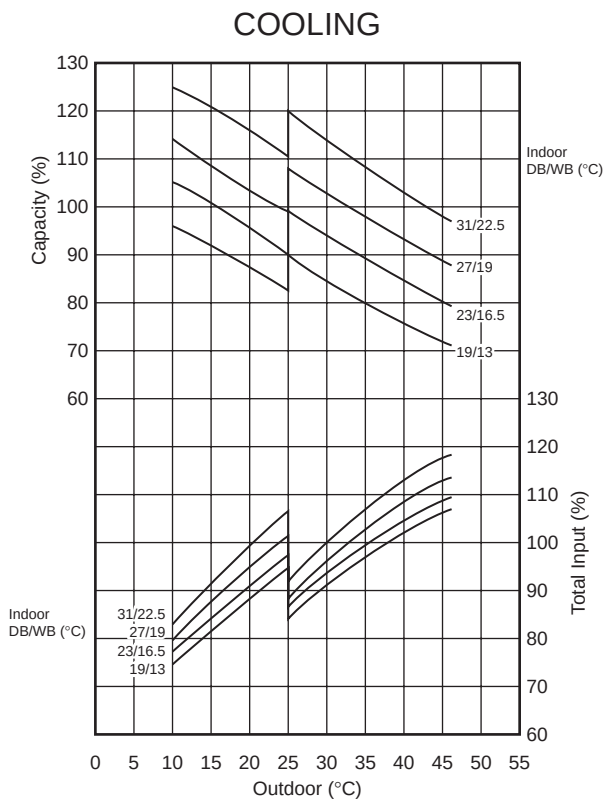

AR□7R / 9R / 12R / 14R

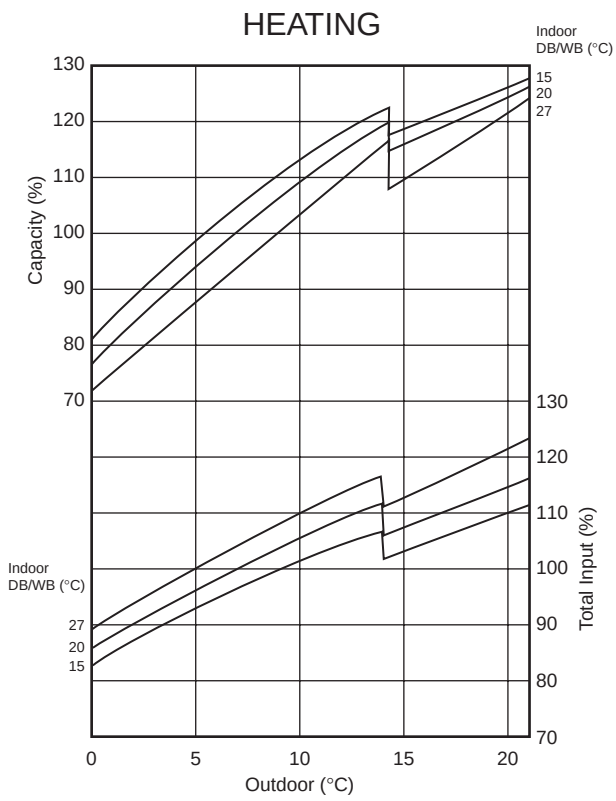

Все каталоги и инструкции здесь: http://splitoff.ru/tehn-doc.html

3.2 FAN CURVE

Note :
□ { Y : Europe version
T : Australia version

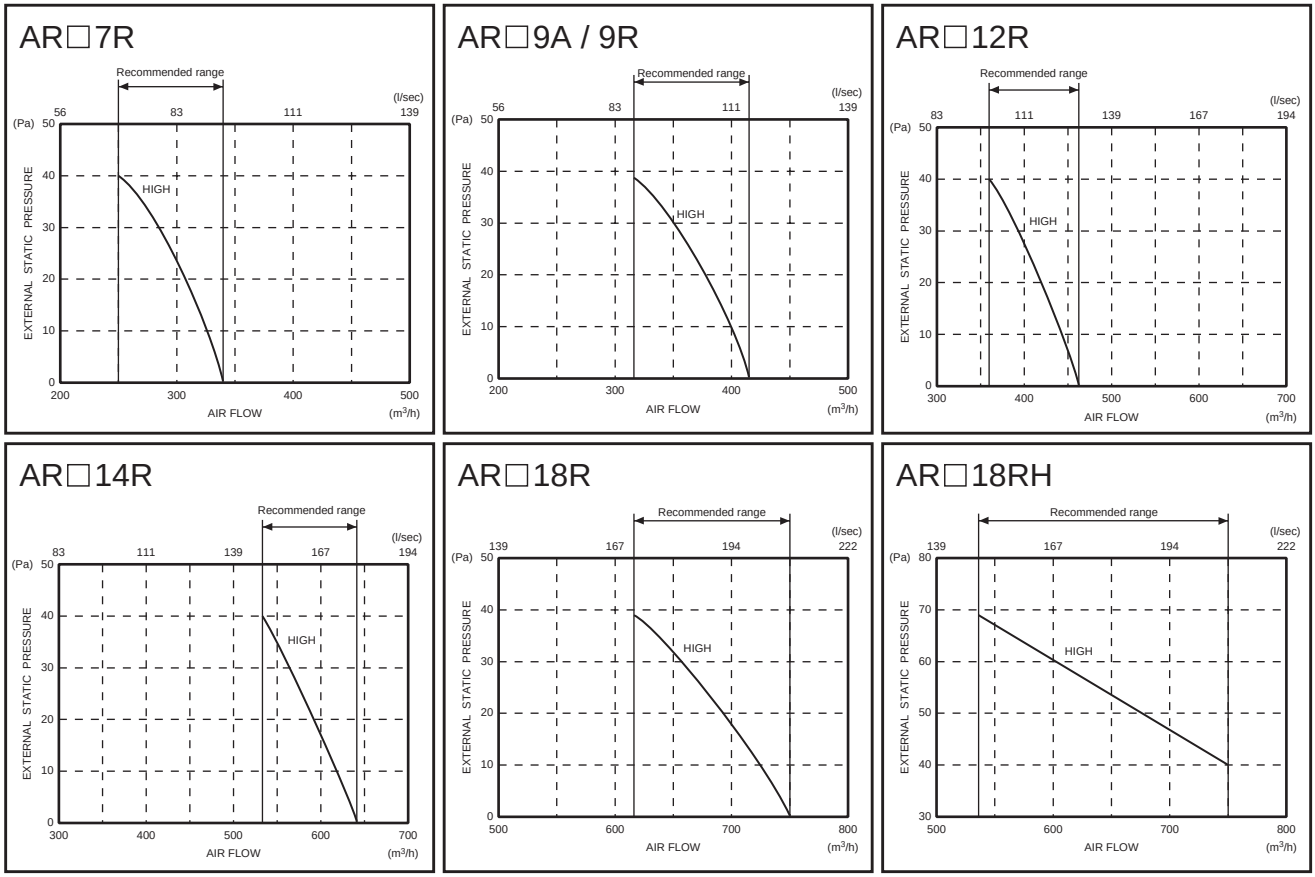

3.3 CAPACITY BY AIR FLOW

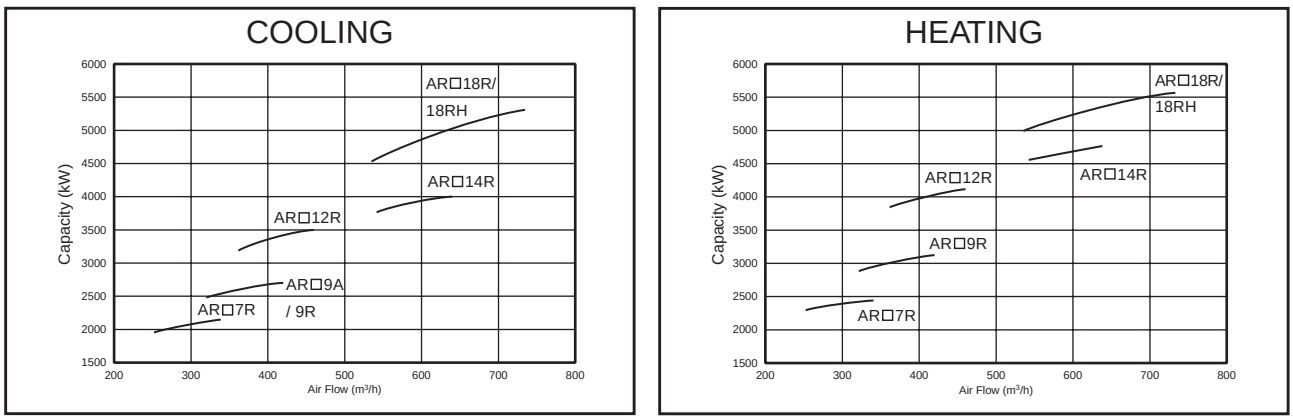

3.4 OUTLET AIR TEMPERATURE

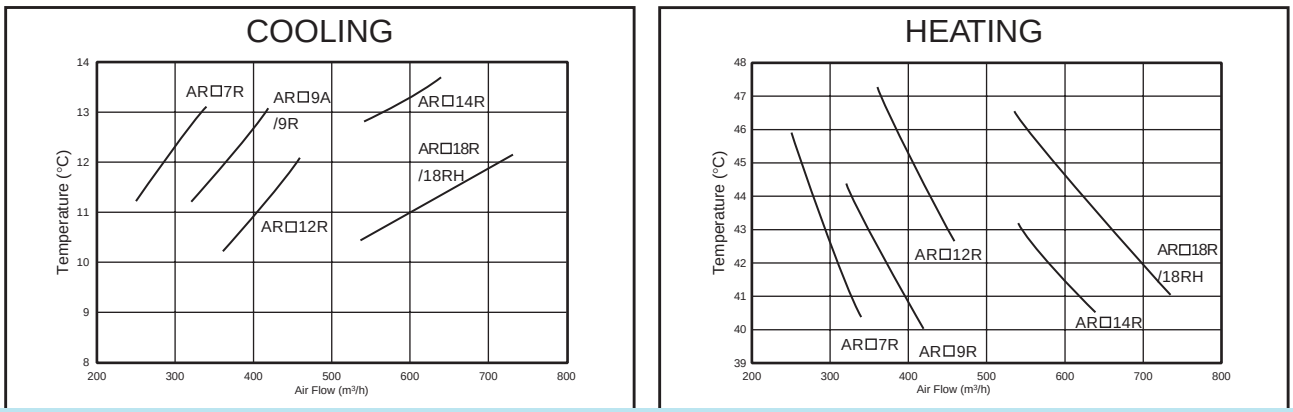

Все каталоги и инструкции здесь: http://splitoff.ru/tehn-doc.html

3.5 TEMPERATURE RANGE

Note :
□ { Y : Europe version
T : Australia version

MODEL NO.	OPERATION	Temperature Range	
		Indoor Unit	Outdoor Unit
AR□18R	COOLING	Approx. 18°C to 32°C	Approx. 0°C to 52°C
AR□14R AR□12R AR□9R/9A AR□7R			Approx. 21°C to 43°C
AR□18R AR□14R AR□12R AR□9R AR□7R	HEATING	Approx. 30°C or less	Approx. 0°C to 21°C

3.6 REFRIGERANT CHARGE

PIPE LENGTH		5m	7.5m	10m	15m	20m	Additional refrigerant g/m (oz/ft)
FULL CHARGE AMOUNT	AR□7R	950g (33.5oz)				———	———
	AR□9A	920g (32.5oz)				———	———
	AR□9R	950g (33.5oz)				———	———
	AR□12R	1,020g (36.0oz)				———	———
	AR□14R	1,000g (35.3oz)		1,050g (37.0oz)	1,150g (40.6oz)	———	20 (0.22)
	AR□18R	1,650g (58.2oz)		1,775g (62.6oz)	2,025g (71.4oz)	2,275g (80.2goz)	50 (0.53)

- AR□7R/9A/9R/12R have a chargeless design.
- When the connection piping length exceeds 7.5m, the AR□14R/18R/18RH require an additional charge of 20g/m (14R) and 50g/m(18R/18RH).

Все каталоги и инструкции здесь: http://splitoff.ru/tehn-doc.html

4. SPECIFICATIONS

Note :
□ { Y : Europe version
T : Australia version

Model		Indoor Unit		AR□7RLB	AR□9ALB	AR□9RLB	AR□12RLB	AR□14RLB	AR□18RLB	AR□18RLBH
		Outdoor Unit		AO□7RGA	AO□9AGA	AO□9RGA	AO□12RGA	AO□14RGA	AO□18RZDL	
Power Source			ϕ/Hz	1ϕ / 50						
			V	220 - 240						
Capacity		Cooling	kW	2.10 - 2.15	2.70 - 2.80	2.60 - 2.70	3.40 - 3.50	3.90 - 4.00	5.20 - 5.30	
			BTU/h	7,150 - 7,350	9,200 - 9,500	8,900 - 9,200	11,300 - 11,600	13,300- 13,700	17,800 - 18,100	
		Heating	kW	2.40 - 2.45	——	3.00 -3.10	4.00 - 4.10	4.70 - 4.80	5.50 - 5.60	
			BTU/h	8,200 - 8,350	——	10,200 - 10,600	13,700 - 14,000	16,000- 16,400	18,800 - 19,100	
Total Ampacity		Cooling	A	3.6 - 3.5	4.3 - 4.2	4.1 - 3.9	5.5 - 5.3	7.1 - 7.2	9.4 - 9.2	
		Heating		3.4 - 3.3	——	4.1 - 3.9	5.7 - 5.5	6.9 - 7.0	8.3 - 8.2	
Total Input		Cooling	kW	0.76 - 0.80	0.93 - 0.97	0.87 - 0.92	1.20 - 1.25	1.50 - 1.60	2.05 - 2.15	
		Heating		0.72 - 0.75	——	0.87 - 0.92	1.25 - 1.30	1.47 - 1.54	1.80 - 1.90	
E.E.R.		Cooling	kW/kW	2.76 - 2.69	2.90 - 2.89	2.99 - 2.94	2.83 - 2.80	2.60 - 2.50	2.54 - 2.47	
		Heating		3.33 -3.27	——	3.45 - 3.37	3.20 - 3.15	3.20 - 3.10	3.06 - 2.95	
Starting Current			A	17	21		29	33	50	
Indoor Unit	Fan Speed	High	r.p.m.	680	960		640	840	960	1,310
		Med		630	880		610	740	900	1,220
		Low		580	810		580	650	840	1,120
	Air Circulation	High	m^3/h	340	420		460	640	750	
		Med		320	390		430	560	700	
		Low		290	360		390	480	640	
	Noise	High	dB (A)	31	35		26	32	39	36
		Med		28	33		25	29	38	35
		Low		26	31		24	26	36	33
	Fan Type x Q'ty			Sirocco x 1			Sirocco x 2			
	Dimensions H x W x D	Net	mm	217 x 663 x 595			217 x 953 x 595			
		Gross		324 x 785 x 686			324 x 1,075 x 686			
	Weights	Net / Gross	kg	18 / 22			25 / 29			
Outdoor Unit	Fan Speed		r.p.m.	740						
	Air Circulation		m^3/h	1,600					2,590	
	Noise		dB (A)	48			49		54	
	Fan Type x Q'ty			Propeller x 1						
	Dimensions H x W x D	Net	mm	530 x 750 x 250					643 x 840 x 336	
		Gross		609 x 882 x 339					750 x 959 x 429	
	Weights	Net / Gross	kg	31 / 33	30 / 32	34 / 36	37 / 39		67 / 76	
Refrigerant Charge			kg	0.95	0.92	0.95	1.02	1.00	1.65	
Pipe Size (Liquid / Gas)			mm	ϕ6.35 / ϕ9.53			ϕ6.35 / ϕ12.7		ϕ9.53 / ϕ15.88	
Connection Method				Flare						
Pipe Length / Height			m	15 / 8					20 / 8	
Remote Controller Cable Length				L.C.D. Wired (10m)						
Static Pressure			Pa	0 (max. 40)						40 (Max. 70)
Operation Range		Cooling	°C	In : 18 - 32, Out : 21 - 43					In : 18 - 32, Out : 0 -52	
		Heating		In : 16 - 30, Out : 0 - 21						

Все каталоги и инструкции здесь: http://splitoff.ru/tehn-doc.html

MEMO

Все каталоги и инструкции здесь: http://splitoff.ru/tehn-doc.html

FUJITSU GENERAL (Euro) GmbH

A SUBSIDIARY OF FUJITSU GENERAL LIMITED

Werftstraße 20, D-40549 Düsseldorf, F.R. Germany TEL : (49) 211 50098 0

FUJITSU GENERAL (U.K.) CO. LIMITED

A SUBSIDIARY OF FUJITSU GENERAL LIMITED

Ground Floor, Elstree House, Elstree Way, Borehamwood, Herts WD6 1LS United Kingdom

TEL : (44) 181 421 7000

FUJITSU GENERAL(AUST.) PTY LIMITED

ACN 001 229 554

A SUBSIDIARY OF FUJITSU GENERAL LIMITED

HEAD OFFICE

SYDNEY :	100 Holbeche Road, Arndell Park, N.S.W. 2148	TEL: (02) 8822 2500
MELBOURNE :	Unit 7, 14 Lionel Road, Mount Waverley, VIC. 3149 (also all Tasmanian enquiries)	TEL: (03) 9543 5899
BRISBANE :	Suite 1, Level 5, 301 Coronation Drive, Milton, QLD. 4064	TEL: (07) 3367 2008
ADELAIDE :	146 Fullarton Road, Rose Park, S.A. 5067	TEL: (08) 8364 0588
PERTH :	Suite 3, 5 Mumford Place, Balcatta W.A. 6021	TEL: (08) 9240 5877

FUJITSU GENERAL NEW ZEALAND LIMITED

A SUBSIDIARY OF FUJITSU GENERAL LIMITED

HEAD OFFICE

WELLINGTON : Level 1, 8-10 Fitzherbert Street, Petone, New Zealand TEL: (04) 568 8761

0009J-905-1740 September 2000 Printed in Japan

Большая библиотека технической документации
http://splitoff.ru/tehn-doc.html
каталоги, инструкции, сервисные мануалы, схемы.